QUADLOCK ROAD S6082
4-Way Cross Beam

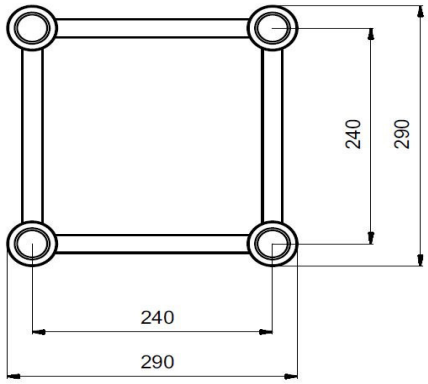

Size in millimeters

System components (straights):		
Designation	No.	Weight (kg)
QUADLOCK ROAD S6082- 210	60306340	2,8
QUADLOCK ROAD S6082- 290	60306342	3,2
QUADLOCK ROAD S6082- 500	60306344	4,1
QUADLOCK ROAD S6082- 1000	60306346	6,2
QUADLOCK ROAD S6082- 1500	60306350	8,4
QUADLOCK ROAD S6082- 2000	60306352	10,6
QUADLOCK ROAD S6082- 2500	60306354	12,7
QUADLOCK ROAD S6082- 3000	60306356	14,9
QUADLOCK ROAD S6082- 4000	60306358	19,2
QUADLOCK ROAD S6082- 5000	60306360	23,5

Material used:

Alloy	EN-AW 6082 T6 (AlSi1MgMn)
Main chords	50 x 2 mm
Braces	16 x 2 mm
Accessory/truss	4x connecting cone, 8x pivot, 8x pin
Item No.	60302895

Load table QUADLOCK ROAD S6082:				
Span	Point load	Deflection	UDL	Deflection
(m)	(kg)	(mm)	(kg/m)	(mm)
2	1664	2,6	1655	3,2
4	832	10,3	416	12,9
6	555	23,3	185	29,1
8	416	41,4	104	51,7
10	332	64,6	66	80,8
12	277	93,0	46	116,3
14	238	126,6	34	158,3
16	208	165,4	27	206,8

Maximum system length: 16 meters

The load capacities given in this load table are based on calculations in accordance with EUROCODE 9 and do not include the net weight of the product. This load table is valid only for linear segments of the cross beam system ALUTRUSS QUADLOCK ROAD S6082 4-Way Cross Beam.
This product has been designed for static loads only. No dynamic loads. If dynamic loads are to be attached to the system, the user has to provide appropiate proof.
Loads are to be attached only to the intersections of the braces and main chords. That applies to loads distributed over the carrier length too.
The cross beams and connectors must be checked for damages and deformations before each use.
For BS and ANSI compliance multiply the given capacities with 0.85.

Stand:
08.03.2024